Fairy

3.5” Form Factor Carrier Board for EDM Type 1 System-on-Modules

Develop your mobile embedded device quickly with the Fairy EDM Carrier Board which features a variety of sensors and interconnects.

HDMI, TTL and LVDS display interfaces.

Communication by dual PCI Express (with SIM cardslots).

Dual CAN Bus, Dual UART, USB and 8 GPIO’s for Industrial control.

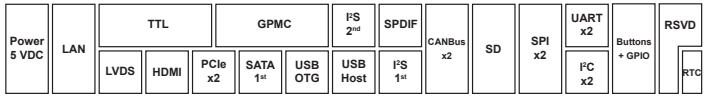

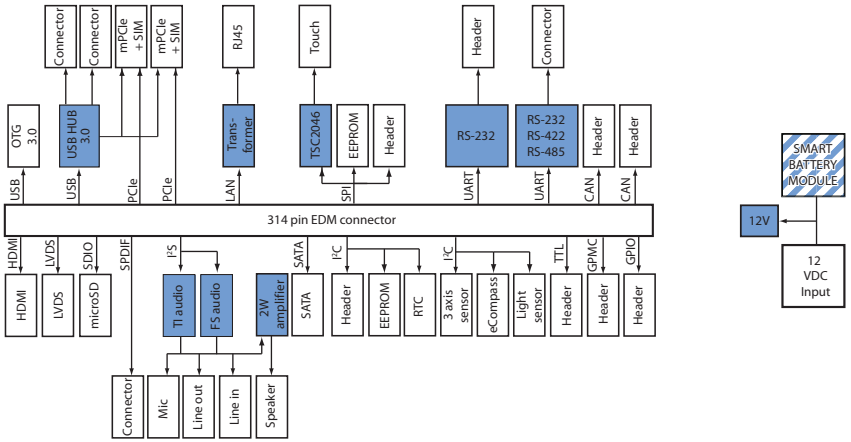

Core System

System on Module	EDM Type 1 compliant

Video

Display	1x HMDI 1 channel LVDS 18/24 bit RGB TTL 24 bit

Touch

Controller	TSC2046 (4 wire by SPI)
Connector	4 wire touch panel

Audio

Codec	Jumper selectable: Freescale SGTL5000 (I²S), TI TLV320AIC23B (I²S)
Connector	1x 3.5 mm jack Stereo Audio in 1x 3.5 mm jack Stereo Audio out 1x 3.5 mm jack Microphone S/PDIF
Speaker	2W amplified speaker connectors

Sensors

3-axis Movement	ST Microelectronics LIS331DLH
Light Sensor	Intersil ISL29023IROZ-T7
Compass	Freescale MAG3110FCR1
Real Time Clock	Maxim integrated DS1337+

Expansion an Connectivity

Expansion Slots	2x mini-PCIe + SIM cardslot (for 3G communication)
Ethernet	1x Gigabit LAN
USB	2x USB 3.0 Host 1x micro USB 3.0 / 2.0 OTG

Storage

Connector	1x SATA 1x micro SD cardslot (SDIO)

Communication and Control

Header	2x CAN Bus 1x UART (RS-232) 1x UART (RS-232/422/485) 2x SPI (shared with EEPROM) 2x I²C (shared with EEPROM) 8x GPIO Local Bus Reserved / manufacturing pins

Power Specifications

Input Power	12 VDC or Smart Battery

Mechanical and Environmental

Temperature	Commercial 0° to 60° C Extended -20° to 70° C Industrial: -40° to 85° C
Humidity	10-90%
Module Connector	314 pins MXM3
Form Factor	3.5” Form Factor
Dimensions	147 x 102 mm (5¾ x 4 inch)
MTBF	>100,000 hours
Weight	115 grams
Shock	50G / 25ms
Vibration	20G / 0-600 Hz

Distributed by:

TEXIM EUROPE

www.texim-europe.com

Dimensions

units in mm

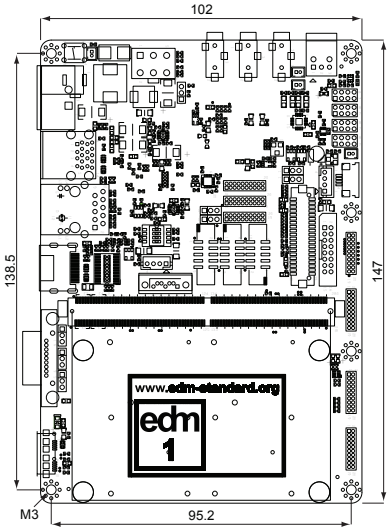

Ordering Information

EDM1-FAIRY-START	EDM Type 1 Evaluation Board including Cablekit and Adaptor
EDM1-FAIRY	3.5” Form Factor Carrier Board for EDM Type 1 System-on-Modules.

The Fairy design files including schematics and gerber files are available to design your own EDM Carrier Board.

2013-03. All specifications are subject to change without notice.

TechNexion